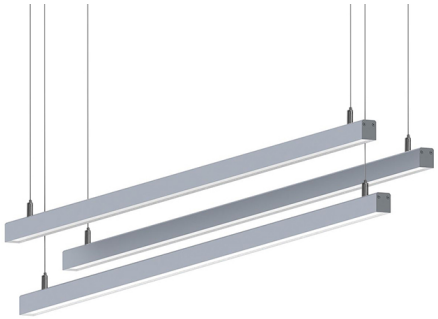

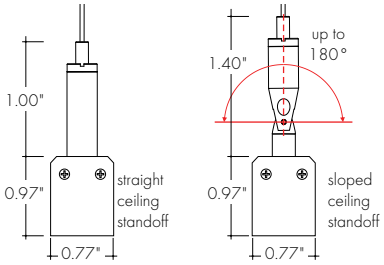

Features

- 24VDC Class 2 fixtures made to order up to 116".
- Class 2 listed for damp locations
- Dot free even illumination
- Available with a remote power supply or an integral power supply option mounted in the canopy.
- Proprietary strong bond solder method handles up to 50 lbs of pull force on wire leads and connectors
- Vibrant Color options offer premium color quality with R9 values up to 98
- High Efficacy option offers highest output and efficacy, with over 510 lm/ft and up to 73 lm/W.
- Average Life (L70): 50,000hrs
- 7 year warranty

Finish Options (see page 2 for additional information)

Base	Silver Anodized		
Powder Coat	Black	Bronze	White

Technical Information

TYPE	Vibrant Color VC72					
OUTPUT OPTIONS	**VC72VLO**	**VC72LO**	**VC72SO**	**VC72MO**	**VC72HO**	**VC72VHO**
Lumens Output (3000K) (with a Frosted Lens)	58 lm/ft	147 lm/ft	196 lm/ft	259 lm/ft	314 lm/ft	418 lm/ft
Average Power Consumption (for a 4' section)	1.1 W/ft	2.8 W/ft	3.7 W/ft	4.9 W/ft	5.9 W/ft	7.9 W/ft
Efficacy	53 lm/W	53 lm/W	53 lm/W	53 lm/W	53 lm/W	53 lm/W
Max Run Length (individual fixture)	9.6 ft	9.6 ft	9.6 ft	9.6 ft	9.6 ft	9.6 ft
Ambient Operating Temperature Range*	-4°F – 122°F (-20°C – 50°C)					-4°F – 95°F (-20°C – 35°C)

*Ambient Operating Temperature Range to maintain L70 of 50k+ hours in normal mounting conditions for the fixture. Exceeding Ambient Operating Temperature Range may result in decreased life/output. Consult Technical Support for specific inquiries.

TYPE	High Efficacy HE64					
OUTPUT OPTIONS	**HE64VLO**	**HE64LO**	**HE64SO**	**HE64MO**	**HE64HO**	**HE64VHO**
Lumens Output (3000K) (with a Frosted Lens)	64 lm/ft	138 lm/ft	198 lm/ft	264 lm/ft	375 lm/ft	514 lm/ft
Average Power Consumption (for a 4' section)	1 W/ ft	1.9 W/ ft	2.9 W/ ft	3.8 W/ ft	5.6 W/ ft	7.1 W/ ft
Efficacy	64 lm/W	73 lm/W	68 lm/W	69 lm/W	67 lm/W	72 lm/W
Max Run Length (individual fixture)	9.6 ft	9.6 ft	9.6 ft	9.6 ft	9.6 ft	9.6 ft
Ambient Operating Temperature Range*	-4°F – 122°F (-20°C – 50°C)					-4°F – 104°F (-20°C – 40°C)

*Ambient Operating Temperature Range to maintain L70 of 50k+ hours in normal mounting conditions for the fixture. Exceeding Ambient Operating Temperature Range may result in decreased life/output. Consult Technical Support for specific inquiries.

Vibrant Color (VC72)

CCT	Multiplier (ref. - 30K)	TM-30 CRI	TM-30 R_f	TM-30 R_g	TM-30 R_9
1800K	0.50	95	94	99	86
2200K	0.66	96	94	101	95
2400K	0.90	98	96	101	91
2700K	0.93	98	96	102	93
3000K	1.00	97	94	104	99
3500K	1.04	96	94	105	97
4100K	1.05	97	95	104	96

High Efficacy (HE64)

CCT	Multiplier (ref. - 30K)	TM-30 CRI	TM-30 R_f	TM-30 R_g	TM-30 R_9
2200K	0.74	94	91	96	65
2400K	0.87	94	92	97	56
2700K	0.97	94	92	100	57
3000K	1.00	93	91	99	54
3500K	1.01	95	91	99	62
4000K	1.04	95	91	99	68

Ordering Code

MODEL - LENGTH[1] - OUTPUT[2] - CCT - LENS - STANDOFF TYPE - FINISH[3,4] - POWERFEED

MODEL
- KUR - Kurat

LENGTH[1]
- 24"–116" (1" increments)
- 24"–116" (2" increments)

OUTPUT[2]
- VC72VLO - Very Low
- VC72LO - Low
- VC72SO - Standard
- VC72MO - Medium
- VC72HO - High
- VC72VHO - Very High
- HE64VLO - Very Low
- HE64LO - Low
- HE64SO - Standard
- HE64MO - Medium
- HE64HO - High
- HE64VHO - Very High

CCT
- 18K - 1800K
- 22K - 2200K
- 24K - 2400K
- 27K - 2700K
- 30K - 3000K
- 35K - 3500K
- 41K - 4100K
- 22K - 2200K
- 24K - 2400K
- 27K - 2700K
- 30K - 3000K
- 35K - 3500K
- 40K - 4000K

LENS
- F - Frosted

STANDOFF TYPE
- S - Straight
- P - Sloped

FINISH[3,4]

BASE
- SA - Silver Anodized

POWDER COAT
- BK - Black
- BZ - Bronze
- WH - White

POWERFEED
- R - Remote
- INT120 - ELV dimming, Integral power supply 120VAC, 40W Max
- INT277 - Lutron Hi-lume A Series LTE Integral power supply 277VAC, 60W Max
- INTECO - Lutron Hi-lume A Series L3D Integral power supply 120-277VAC Ecosystem, MAX 40

1 - Custom lengths and increments are available, please consult Inside Sales with specific request.
2 - Title 24 JA8 achievable depending on Output, CCT, and Lens selections. See multiplier charts to calculate specific efficacies.
3 - Non Base finishes may have extended lead times. Custom RALs are available, please consult Inside Sales with specific request.
4 - White canopy included with all finishes except Black, which include a Black canopy.

Product Dimensions

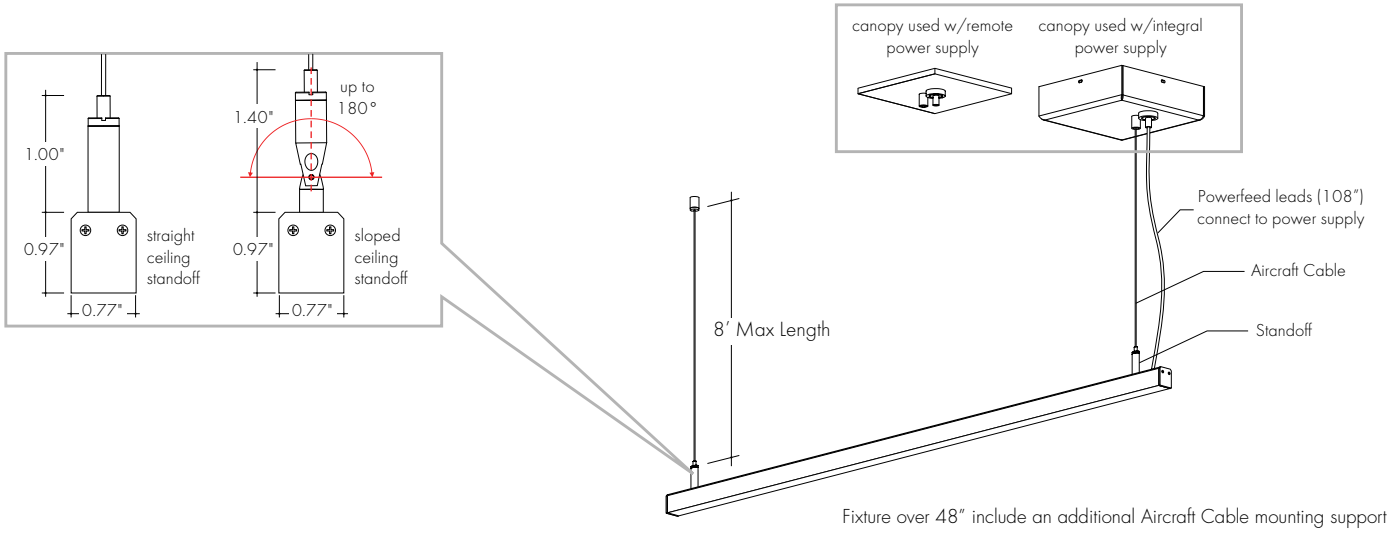

Finish Options

- Finish options are available in a wide variety, allowing for complete customization of style and aesthetic.
- Non Silver Anodized finishes may have extended lead times.
- Custom RALs are available, please consult Inside Sales with specific request.
- White canopy included with all finishes except Black, which include a Black canopy.

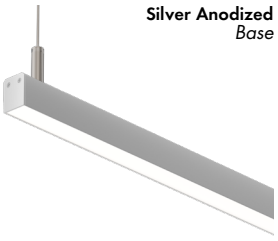

Silver Anodized
Base

Silver Anodized is a soft silver with a clear finish.

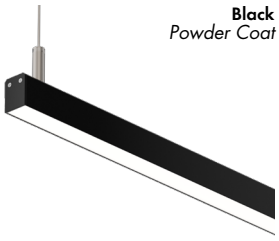

Black
Powder Coat

Black is a true deep black with a glossy finish.

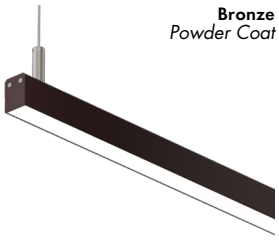

Bronze
Powder Coat

Bronze is a rich, dark brown with a satin finish.

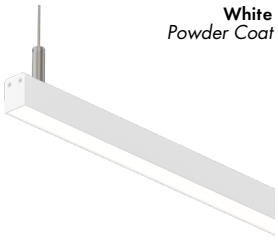

White
Powder Coat

White is a polar bright white and field paintable.

Light Transmission and Dotting

	Lens/Accessory			
Output Options	**Frosted Lens**			
Dimming Level	100%	50%	10%	1%
VC72VLO	ND	ND	ND	ND
VC72LO	ND	ND	ND	ND
VC72SO	ND	ND	ND	ND
VC72MO	ND	ND	ND	ND
VC72HO	ND	ND	ND	ND
VC72VHO	ND	ND	ND	ND
HE64VLO	ND	ND	ND	ND
HE64LO	ND	ND	ND	ND
HE64SO	ND	ND	ND	ND
HE64MO	ND	ND	ND	ND
HE64HO	ND	ND	ND	ND
HE64VHO	ND	ND	ND	ND
Transmission Percentage	100%			

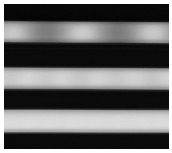

CD - Clear Dotting

SD - Slight Dotting

ND - No Dotting

Use complete Dotting Chart Tool online for more dotting information

I'm also click-able

Photometry

KUR-48-VC72VHO-30K-F

Kurat, 4ft, 3000K, VHO, Frosted Lens

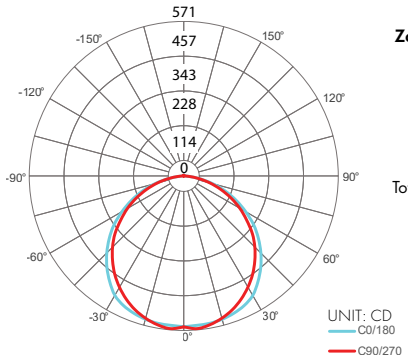

Zonal Lumen Summary 3000K

	Zone	Lumen	% Fixture
	0-30	110	26%
	0-40	181	43%
	0-60	324	78%
	0-90	414	99%
Total	0-180	418	100%

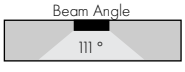

Power Consumption

Please visit the link/QR code below to access the Luminii Power Consumption Chart tool on our website.

There you will be able to select your fixture, ouput, and desired power feed to get a full power consumption table.

I'm also click-able

Desired Nominal Length: _____

Desired Output: _____

Desired CCT: _____

Voltage Drop Calculator

The below chart assumes nominal voltage of 24 Volts and a Voltage Drop Allowance of 3% through the wire

Wattage [W]	Wire Length From Power Supply to Start of Run [ft]						
	12 AWG	14 AWG	16 AWG	18 AWG	20 AWG	22 AWG	24 AWG
5	1088.2	684.4	430.3	270.6	170.2	107.1	67.3
10	544.1	342.2	215.1	135.3	85.1	53.5	33.7
15	362.7	228.1	143.4	90.2	56.7	35.7	22.4
20	272.0	171.1	107.6	67.7	42.6	26.8	16.8
25	217.6	136.9	86.1	54.1	34.0	21.4	13.5
30	181.4	114.1	71.7	45.1	28.4	17.8	11.2
35	155.5	97.8	61.5	38.7	24.3	15.3	9.6
40	136.0	85.5	53.8	33.8	21.3	13.4	8.4
45	120.9	76.0	47.8	30.1	18.9	11.9	7.5
50	108.8	68.4	43.0	27.1	17.0	10.7	6.7
55	98.9	62.2	39.1	24.6	15.5	9.7	6.1
60	90.7	57.0	35.9	22.6	14.2	8.9	5.6
65	83.7	52.6	33.1	20.8	13.1	8.2	5.2
70	77.7	48.9	30.7	19.3	12.2	7.6	4.8
75	72.5	45.6	28.7	18.0	11.3	7.1	4.5
80	68.0	42.8	26.9	16.9	10.6	6.7	4.2
85	64.0	40.3	25.3	15.9	10.0	6.3	4.0
90	60.5	38.0	23.9	15.0	9.5	5.9	3.7
96	56.7	35.6	22.4	14.1	8.9	5.6	3.5

Power Supplies

See Power Supply instructions and spec sheet for wiring information. For a complete list of compatible dimmers, see Compatible Dimming Chart on the Resources page.

For use with Static White

Ordering Code - Universal Dimming Power Supplies 0.1% 120VAC - 277VAC

MODEL		INPUT CONTROL		WATTAGE		OUTPUT
	–		–		–	
PS - Power Supply, 120-277VAC		UNI - 0-10V Dimming (0.1%), Phase Dimming (0.1%)		30 - 30 Watts 60 - 60 Watts 96 - 96 Watts 3x96 - 3x96 Watts		24 - 24 VDC

Compatibility: View a complete list of compatible dimmers on the PS-UNI product page.

0-10V - 0.1% dimming
MLV/ELV/TRIAC - 0.1% dimming, consult dimming compatibility chart

MODELS	PS-UNI-30W	PS-UNI-60W	PS-UNI-96W	PS-UNI-3X96W
Length	6.50″	7.40″	8.66"	11.85"
Width	3.73″	3.73″	3.73"	4.32"
Depth	1.61″	1.61″	1.61"	1.81"

PS-UNI-30/60/96

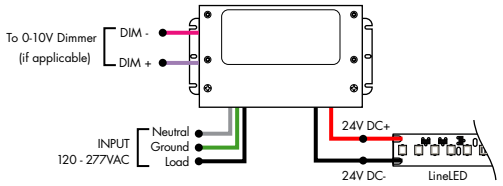

PS-UNI-3X96

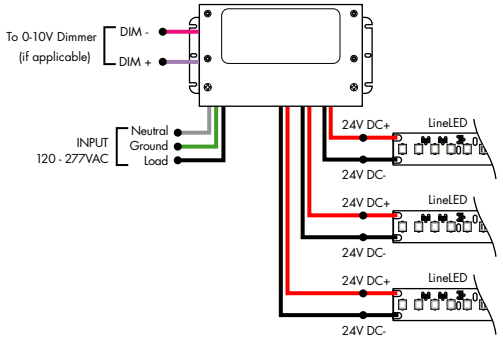

For use with Static White

Ordering Code - 0-10V Dimming Power Supplies 0.1% 120VAC - 277VAC

MODEL		INPUT CONTROL		ENVIRONMENT		WATTAGE		OUTPUT
	-		-		-		-	
PS - Power Supply, 120-277VAC		010V-LIN - 0-10V Dimming (0.1%), Linear 010V-LOG - 0-10V Dimming (0.1%), Logarithmic		D - Dry		96 - 96 Watts 3x96 - 3x96 Watts		24 - 24 VDC

MODELS	96W	3X96
Length	14.40"	15.00"
Width	5.20"	6.62"
Depth	2.60"	4.45"

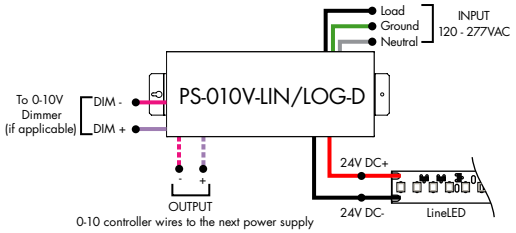

PS-010V-LIN/LOG-D-3X96

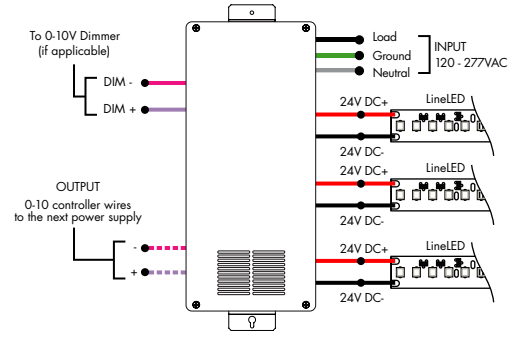

Power Supplies

See Power Supply instructions and spec sheet for wiring information. For a complete list of compatible dimmers, see Compatible Dimming Chart on the Resources page.

For use with Static White

Ordering Code - Athena 0-10V LED Driver

MODEL	INPUT CONTROL	ENVIRONMENT	WATTAGE	OUTPUT	FEATURE
PS - Power Supply, 120-277VAC	010V-LIN - 0-10V Dimming (0.1%), Linear 010V-LOG - 0-10V Dimming (0.1%), Logarithmic	D - Dry	96 - 96 Watts	24 - 24 VDC	AWNR - Athena Wireless Node

MODELS	96W
Length	14.40"
Width	5.20"
Depth	2.60"

PS-010V-LIN/LOG-D-96-ANWR

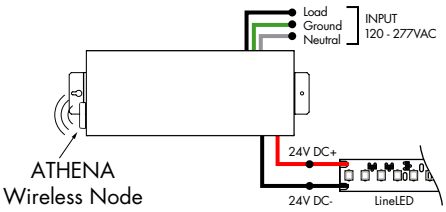

For use with Static White

Ordering Code - DALI 2 Dimming Power Supplies 0.1% 120VAC - 277VAC

MODEL	INPUT CONTROL	ENVIRONMENT	WATTAGE	OUTPUT
PS - Power Supply, 120-277VAC	DALI2-DT6 - DALI2 DT6 (0.1%)	D - Dry	96 - 96 Watts	24 - 24 VDC

Model	96W
Length	14.40"
Width	5.20"
Depth	2.60"

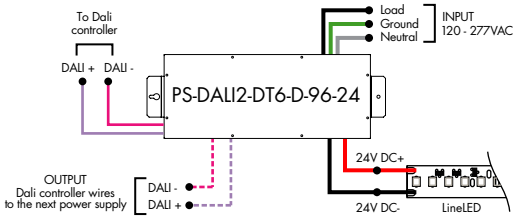

For use with Static White

Ordering Code - DALI Dimming Power Supplies 0.1% 120VAC - 277VAC

MODEL	INPUT CONTROL	ENVIRONMENT	WATTAGE	OUTPUT
PS - Power Supply, 120-277VAC	DALI - DALI (0.1%)	D - Dry	96 - 96 Watts 3x96 - 3x96 Watts	24 - 24 VDC

Model	96W	3X96
Length	14.40"	15.00"
Width	5.20"	6.62"
Depth	2.60"	4.56"

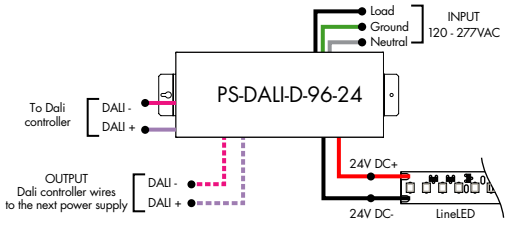

PS-DALI-D-3X96-24

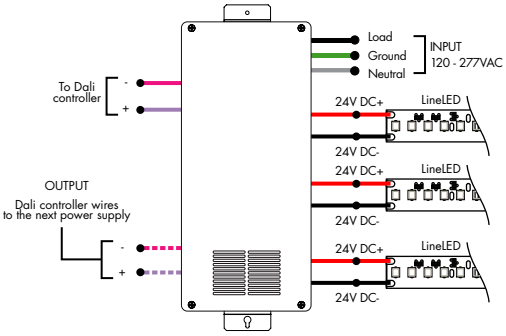

Power Supplies

See Power Supply instructions and spec sheet for wiring information. For a complete list of compatible dimmers, see Compatible Dimming Chart on the Resources page.

For use with Static White

Ordering Code - DMX Dimming Power Supplies 0.1% 120VAC - 277VAC

MODEL	INPUT CONTROL	ENVIRONMENT	WATTAGE	OUTPUT
PS-Power Supply, 120-277VAC	DMX-DMX (0.1%)	D-Dry	96-96 Watts 3x96-3x96 Watts	24-24 VDC

MODELS	96W	3X96
Length	14.40"	15.00"
Width	5.20"	6.62"
Depth	2.60"	4.56"

ZONAL CONTROL POWER SUPPLIES.
CONTROL MULTIPLE TAPES/ZONES USING DMX CHANNELS.

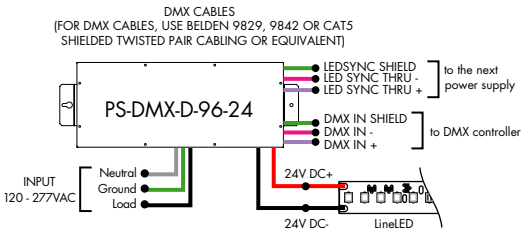

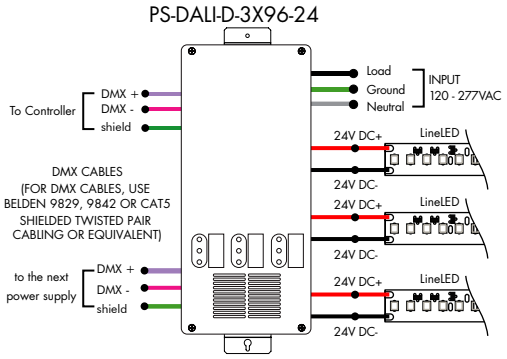

For use with Static White

Ordering Code - Non-Dimming Power Supply, 120VAC - 277VAC

MODEL	INPUT CONTROL	ENVIRONMENT	WATTAGE	OUTPUT
PS-Power Supply, 120-277VAC	ND-Non Dimming	D-Dry	96-96 Watts	24-24 VDC

MODELS	96W
Length	14.40"
Width	5.20"
Depth	2.60"

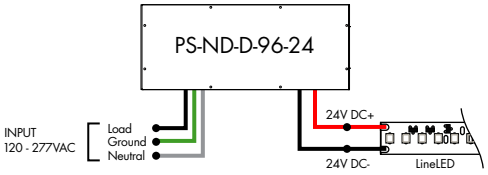

For use with Static White

Ordering Code - In-Ground Power Supplies

MODEL	INPUT CONTROL	ENVIRONMENT	WATTAGE	OUTPUT
PS120-Power Supply, 120VAC PS240-Power Supply, 240VAC PS277-Power Supply, 277VAC	ELV-ELV Dimming (1%)	IG-In Ground	2X96-2X96 Watts	24-24 VDC

MODELS	2X96W
Length	8.40"
Width	8.30"
Depth	8.10"

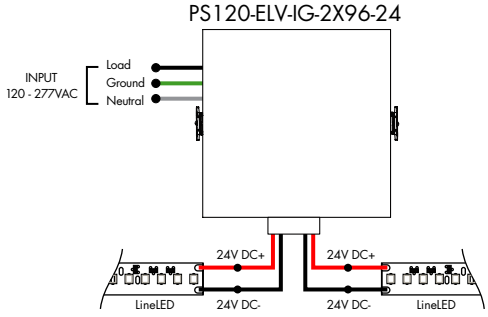

Power Supplies

See Power Supply instructions and spec sheet for wiring information. For a complete list of compatible dimmers, see Compatible Dimming Chart on the Resources page.

For use with Static White

Ordering Code - Athena VintageDim® 0-10V Two Channel LED Driver, 0.1% 120VAC - 277VAC

MODEL	INPUT CONTROL	ENVIRONMENT	WATTAGE	OUTPUT	FEATURE
PS-Power Supply, 120-277VAC	010V-2CH-0-10V Dimming Two Channel Control, LED1 Brightness and LED2 Brightness	D-Dry	96-96 W	24-24 VDC	AWNR-Athena

MODELS	96W
Length	14.40"
Width	5.20"
Depth	2.60"

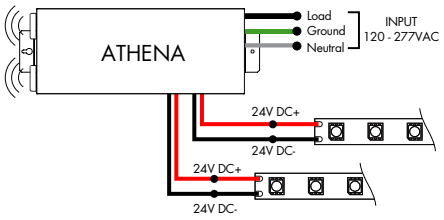

LUTRON®

Luminii is a Lutron OEM Advantage Partner

Lutron Power Supplies 1%

MODEL

L3DA4U1UKL-CV240

HiLume™ 1% EcoSystem Voltage LED driver 40W max

MODELS	L3DA4U1UKL-CV240
Length	4.98"
Width	4.00"
Depth	2.62"

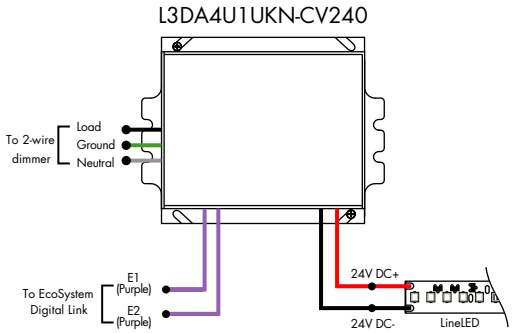

LUTRON®

Luminii is a Lutron OEM Advantage Partner

Lutron Power Supplies 0.1%

MODEL

L3D0-96W24V-U

HiLume™ 0.1% EcoSystem Voltage LED Driver with Soft-On, Fade-to-Black™ 96W max

MODELS	L3D0
Length	10.50"
Width	5.50"
Depth	2.00"

