0-10V Power Supply 3 x 96 Watt - Installation Instructions

Models PS-010V-WD-D-3X96-24

Please read all instructions prior to installation and keep for future reference!

This class 2 power supply is to be installed by a qualified electrician in accordance with the National Electrical Code (NEC) and local building codes. The power supply must be installed in a well ventilated area and free from explosive gases and vapors. Proper operation requires the free flow of air. Power supply is well suited for LED or resistive loads at or below their maximum output rating per circuit. Suitable For Damp Location. **WARNING! Risk of Fire or Electric Shock, Do Not Interconnect Output Terminal.**

c UL us LISTED

REV0.1
07182025

luminii
7777 Merrimac Ave
Niles, IL 60714
T 224.333.6033
F 224.757.7557
info@luminii.com
www.luminii.com

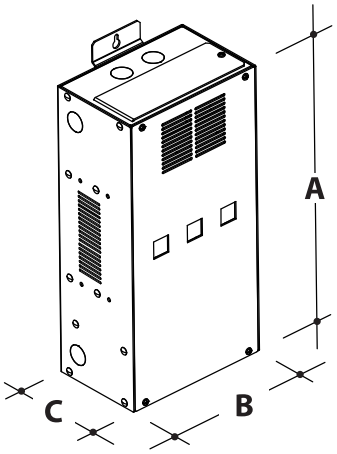

PS-010V-WD-D-3X96-24	
A. Height	13.00"
B. Width	6.60"
C. Depth	4.20"
MAX Load	3 x 96 Watts

1

It is recommended that the power supply be mounted vertically & mount a minimum of 12" above ground level or deck, 24" below ceiling, and allow 4" of clearance around power supply (excluding the mounting side) to provide for proper air circulation. Use the provided hardware to mount properly to wall.

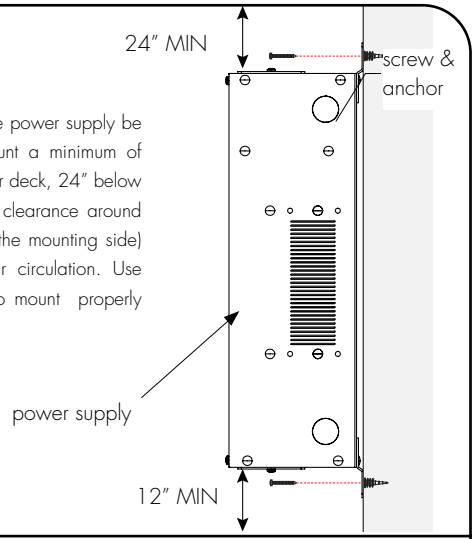

1.1 Before installing, check the label and ensure the power supply has the proper input voltage, output voltage, and wattage for the job. Check the wire markings to ensure they match the wiring diagram below. Refer to table above for the maximum loads supported by each power supply.

2

2.1 Remove the wiring compartment cover and knockouts on both ends of the power supply to connect.

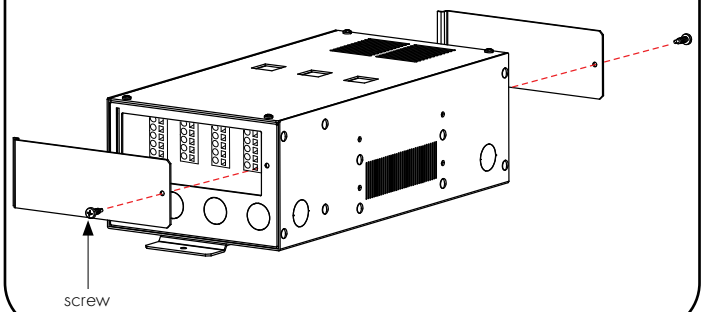

3

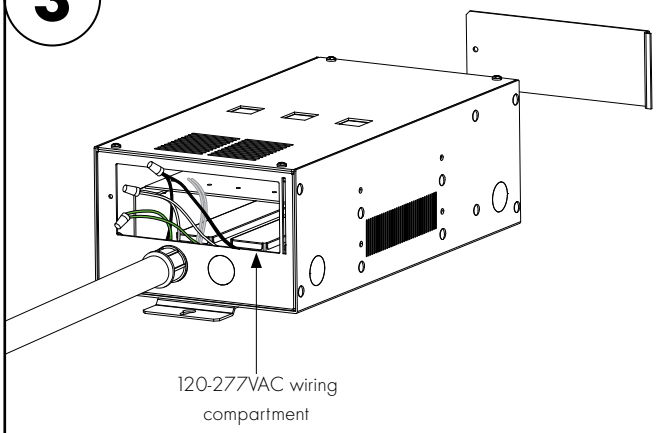

3.1 Connect the white (neutral) and black (hot) power supply wires to the white and black power wires (120 - 277 VAC). Followed by connecting the ground wires in accordance with local electrical codes.

4

4.1 Reference wiring diagrams on page 2. Feed wire into the terminal block hole by inserting a small flat-head screwdriver into the terminal block slot and push down, thus opening the terminal block hole. Then, insert the wire lead and release the screwdriver to secre wire in place.

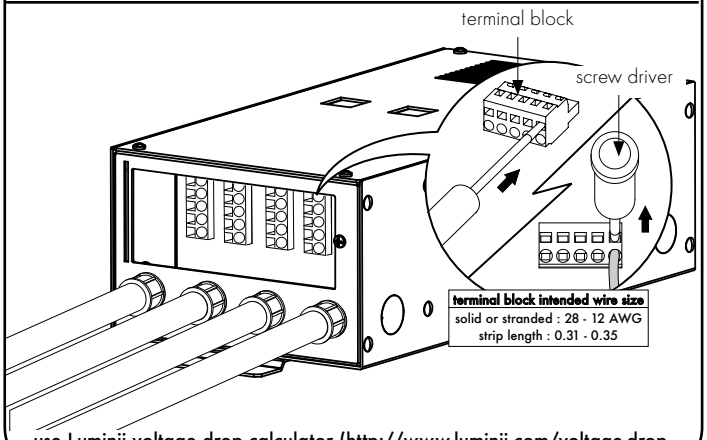

use Luminii voltage drop calculator (http://www.luminii.com/voltage-drop-calculator) to calculate wire gage for low-voltage connection

5

5.1 Secure compartment cover back onto the power supply.

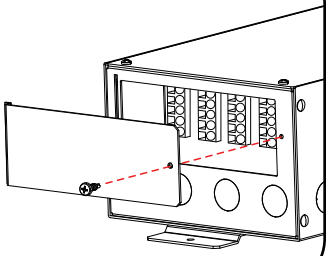

*LUMINII RESERVES THE RIGHTS TO CHANGE SPECIFICATION & INSTRUCTION WITHOUT NOTICE

0-10V Power Supply 3 x 96 Watt - Installation Instructions

Models PS-010V-WD-D-3X96-24

Please read all instructions prior to installation and keep for future reference!

This class 2 power supply is to be installed by a qualified electrician in accordance with the National Electrical Code (NEC) and local building codes. The power supply must be installed in a well ventilated area and free from explosive gases and vapors. Proper operation requires the free flow of air. Power supply is well suited for LED or resistive loads at or below their maximum output rating per circuit. Suitable For Damp Location. **WARNING! Risk of Fire or Electric Shock, Do Not Interconnect Output Terminal.**

c UL us LISTED

REV0.1
07182025

luminii
7777 Merrimac Ave
Niles, IL 60714
T 224.333.6033
F 224.757.7557
info@luminii.com
www.luminii.com

WIRING DIAGRAM

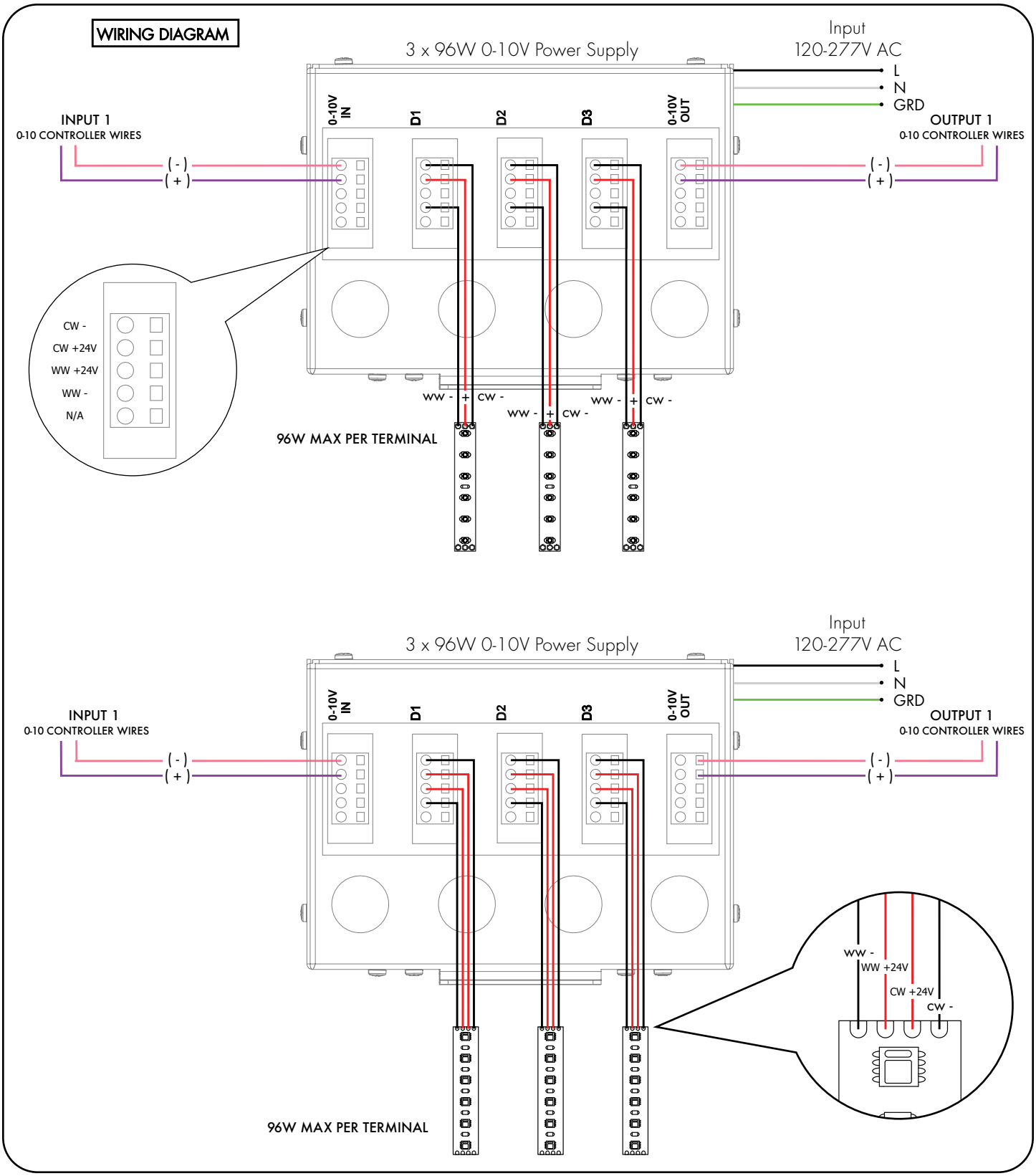

0-10V Power Supply 3 x 96 Watt - Installation Instructions

Models PS-010V-WD-D-3X96-24

Please read all instructions prior to installation and keep for future reference!

This class 2 power supply is to be installed by a qualified electrician in accordance with the National Electrical Code (NEC) and local building codes. The power supply must be installed in a well ventilated area and free from explosive gases and vapors. Proper operation requires the free flow of air. Power supply is well suited for LED or resistive loads at or below their maximum output rating per circuit. Suitable For Damp Location. **WARNING! Risk of Fire or Electric Shock, Do Not Interconnect Output Terminal.**

REV0.1
07182025

luminii
7777 Merrimac Ave
Niles, IL 60714
T 224.333.6033
F 224.757.7557
info@luminii.com
www.luminii.com

User Guide Instructions

1

1.1 Download VintageDim® App from Google Play Store for Android OS or Apple App Store for IOS.

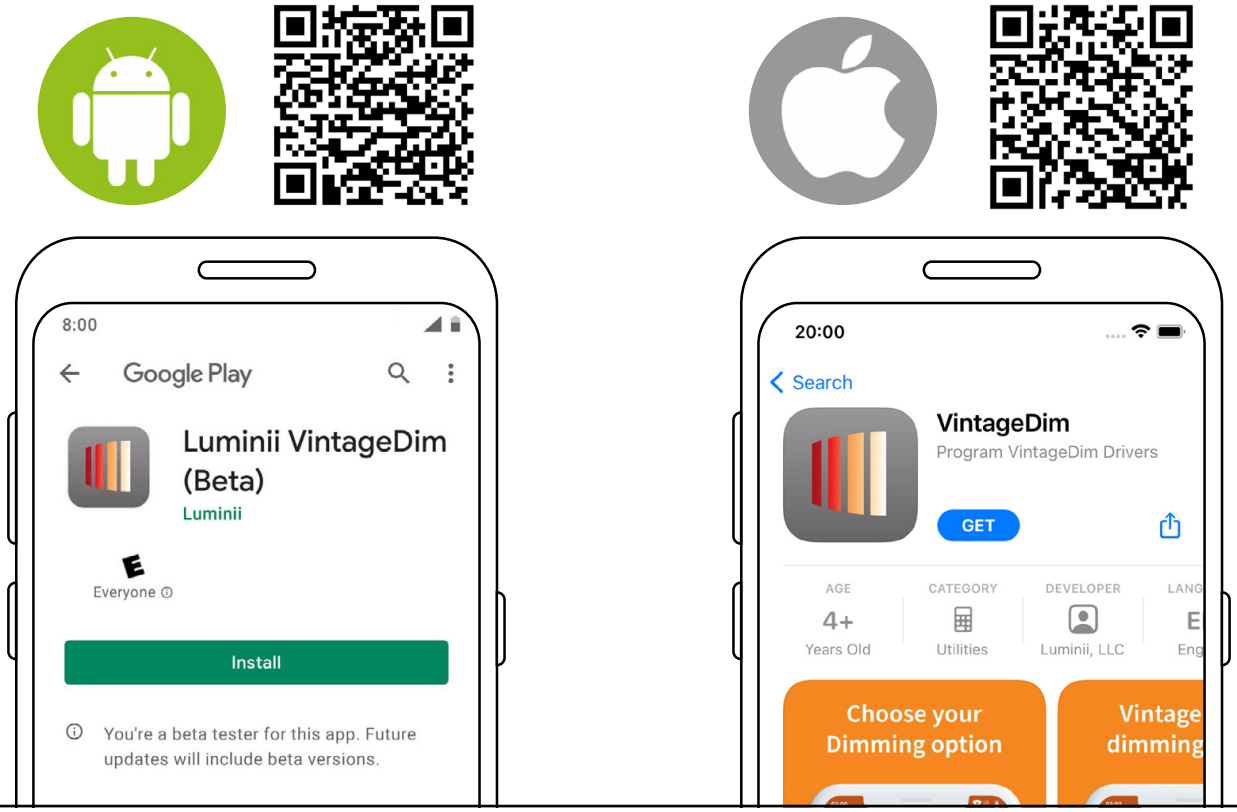

2

2.1 Open the App and choose one of the factory pre-build presets.

1. Two Channel: Individual Control (page 2)

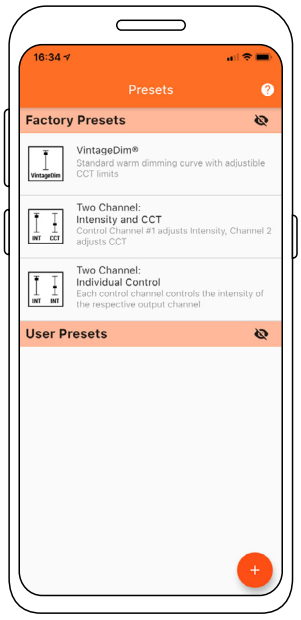

*LUMINII RESERVES THE RIGHTS TO CHANGE SPECIFICATION & INSTRUCTION WITHOUT NOTICE

0-10V Power Supply 3 x 96 Watt - Installation Instructions
Models PS-010V-WD-D-3X96-24

Please read all instructions prior to installation and keep for future reference!

This class 2 power supply is to be installed by a qualified electrician in accordance with the National Electrical Code (NEC) and local building codes. The power supply must be installed in a well ventilated area and free from explosive gases and vapors. Proper operation requires the free flow of air. Power supply is well suited for LED or resistive loads at or below their maximum output rating per circuit. Suitable For Damp Location. **WARNING! Risk of Fire or Electric Shock, Do Not Interconnect Output Terminal.**

c UL us LISTED

REV0.1
07182025

luminii
7777 Merrimac Ave
Niles, IL 60714
T 224.333.6033
F 224.757.7557
info@luminii.com
www.luminii.com

Using the App

3

Please note this step will need to be repeated for each VintageDim® Module



3.1 Select "Create New Preset" button.



3.2 Select VintageDim® preset type.

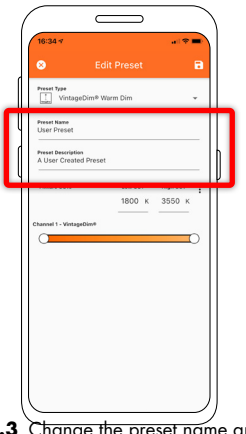

3.3 Change the preset name and description to your own.

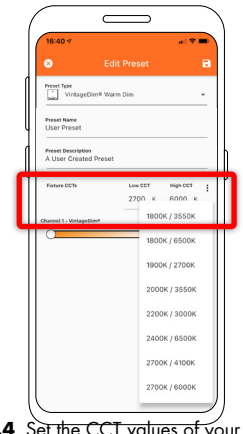

3.4 Set the CCT values of your light source or choose from preset Fixture CCTs option.



3.5 Adjust sliders for maximum and minimum CCT at the bottom of the screen. This calculates the correct curve using the values you set in this section.

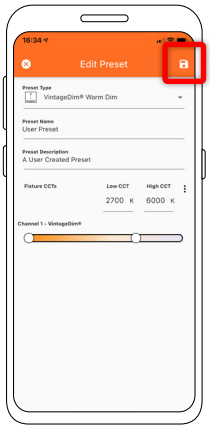

3.6 Save preset.

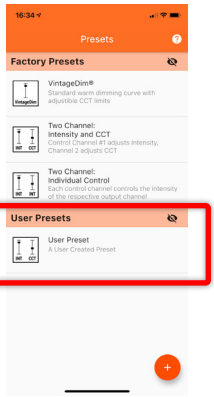

3.7 Select your new user preset from the main list.

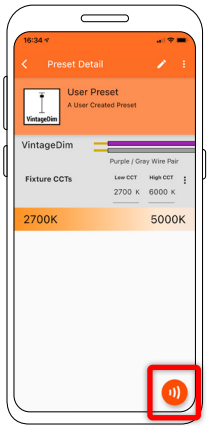

3.8 Press Program button.

3.9 Place phone directly on the VintageDim® module. Phone will play a tone when programming begins. Programming is complete when you hear a single beep and see the "Programming Successful" screen.

If the driver was off during programming, simply power on and the driver will work according to the new program. If the driver was on during programming, it will need to be power cycled for new programming to become active.

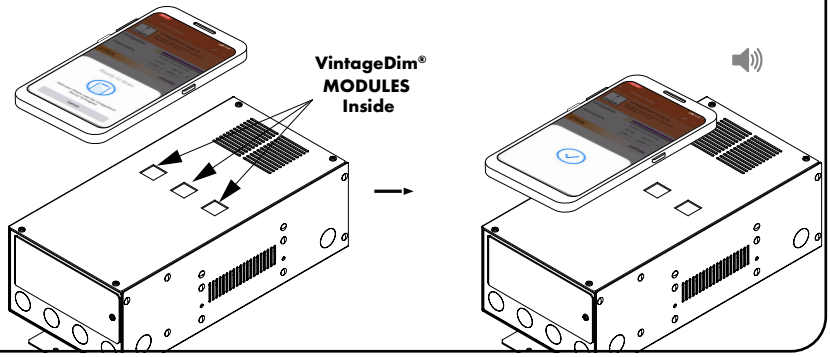

*LUMINII RESERVES THE RIGHTS TO CHANGE SPECIFICATION & INSTRUCTION WITHOUT NOTICE

0-10V Power Supply 3 x 96 Watt - Installation Instructions

Models PS-010V-WD-D-3X96-24

Please read all instructions prior to installation and keep for future reference!

This class 2 power supply is to be installed by a qualified electrician in accordance with the National Electrical Code (NEC) and local building codes. The power supply must be installed in a well ventilated area and free from explosive gases and vapors. Proper operation requires the free flow of air. Power supply is well suited for LED or resistive loads at or below their maximum output rating per circuit. Suitable For Damp Location. **WARNING! Risk of Fire or Electric Shock, Do Not Interconnect Output Terminal.**

REV0.1
07182025

luminii
7777 Merrimac Ave
Niles, IL 60714
T 224.333.6033
F 224.757.7557
info@luminii.com
www.luminii.com

Using the App

4

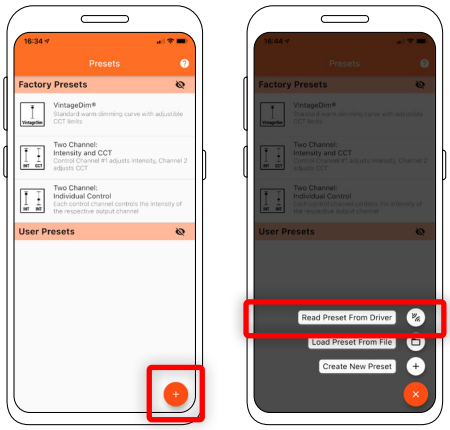

4.1 Select Read Preset From Driver button.

4.2 Place phone directly on the VintageDim® module. Reading is complete when you see the following confirmation on screen.

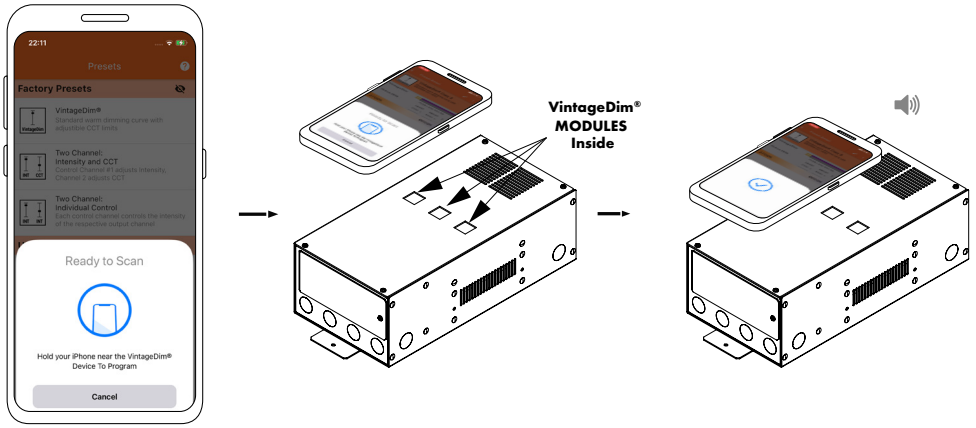

4.3 After successful reading you will see new user preset created with corresponding name and description.

